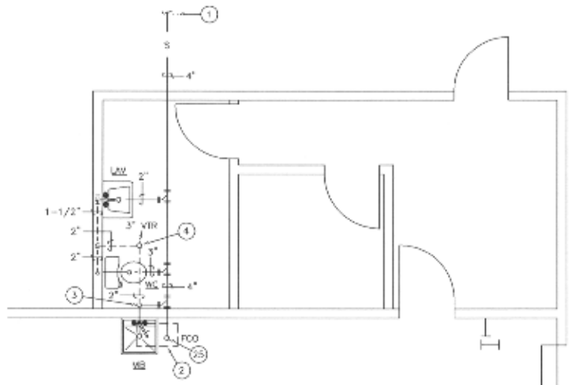

ENLARGED SEWER AND VENT PIPING PLAN

SCALE: 1/4"= 1'- 0"

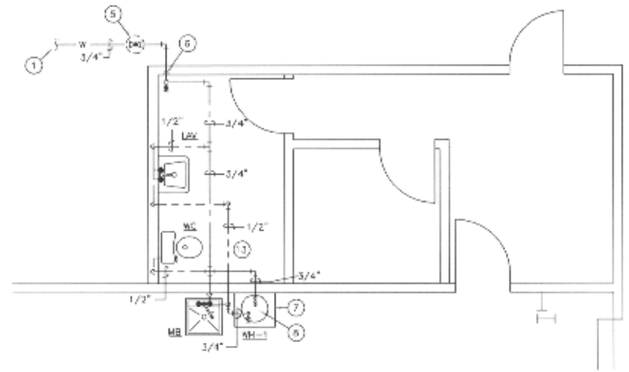

ENLARGED WATER PIPING PLAN

SCALE: 1/4"= 1'- 0"

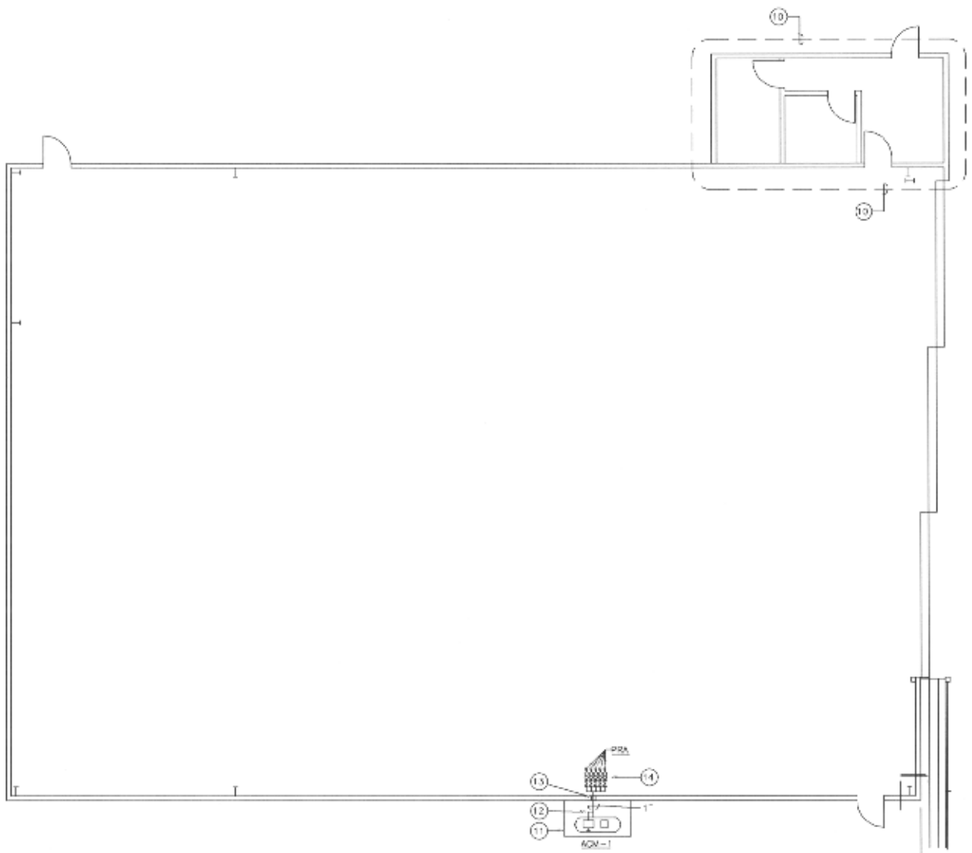

COMPRESSED AIR PIPING PLAN

SCALE: 1/8"= 1'- 0"

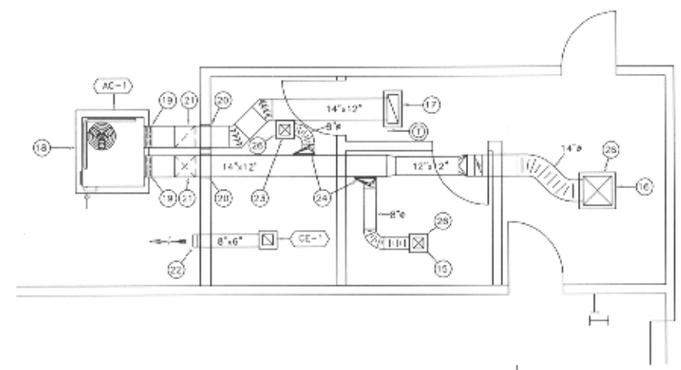

ENLARGED HVAC PLAN

SCALE: 1/4"= 1'- 0"

KEYED NOTES:

1. SEE SITE PLAN FOR CONTINUATION.
2. SAW CUT FLOOR AS NECESSARY TO INSTALL THE FLOOR CLEANOUT AND MOP BASIN.
3. RAISE VENT LINE UP ON THE WALL TO THE CEILING SPACE.
4. RUN THE 3" VENT THROUGH THE ROOF PER DETAIL 2/M2.
5. INSTALL A SHUT-OFF VALVE, BELOW GRADE, PER DETAIL 1/M2.
6. RAISE THE 3/4" COLD WATER LINE UP IN WALL FROM BELOW GRADE AND TURN LINE HORIZONTAL IN THE CEILING SPACE. RUN LINE ON THE BUILDING SIDE OF THE INSULATION.
7. INSTALL THE ELECTRIC WATER HEATER ON AN 18" HIGH PEDESTAL.
8. CONNECT WATER LINES TO THE WATER HEATER WITH A SHUT-OFF VALVE AND UNION ON EACH LINE.
9. DROP WATER LINE(S) DOWN IN WALL ON THE BUILDING SIDE OF THE INSULATION, AND TERMINATE LINE WITH AN ANGLE STOP THROUGH THE WALL.
10. SEE ENLARGED HVAC AND PLUMBING PLANS, THIS SHEET, FOR INFORMATION IN THIS AREA.
11. INSTALL AIR COMPRESSOR ON A 4" THICK CONCRETE PAD.
12. CONNECT THE 1" COMPRESSED AIR LINE TO THE AIR COMPRESSOR WITH AN OUTDOOR GRADE, 8" LONG, FLEXIBLE CONNECTOR RATED FOR 300 PSIG WORKING PRESSURE.
13. RUN PIPING THROUGH THE WALL IN A STEEL SLEEVE. SEAL AROUND PIPE AND SLEEVE.
14. ATTACH THE PRESSURE REGULATOR/FILTER ASSEMBLY TO THE WALL WITH UNISTRUT SUPPORTS, TYPICAL OF 5.
15. D-1 150 CFM, 6"x6" NECK, 12"x12" FRAME, 4-WAY T-ROW.
16. D-1 590 CFM, 18"x18" NECK, 4-WAY THROW.
17. RG-1 22"x10" NECK.
18. MOUNT A/C UNIT ON A 24" HIGH STAND PER DETAIL 7/M2.
19. CONNECT DUCT TO A/C UNIT WITH A FLEX CONNECTOR AND SUN SHIELD PER DETAIL 6/M2.
20. RUN DUCT THROUGH THE WALL IN A SLEEVE. SEAL AROUND DUCT AND SLEEVE.
21. RUN DUCT UP ON WALL AND TURN DUCT HORIZONTAL JUST BELOW THE ROOF STRUCTURE. ATTACH DUCT TO WALL WITH SUPPORTS ON 4 FEET CENTERS.
22. TERMINATE THE EXHAUST DUCT WITH A WALL VENT.
23. D-2 160 CFM, 6"x6" NECK, 4-WAY THROW.
24. INSTALL DUCT TAKE-OFF PER DETAIL 3/M2.
25. INSTALL FLOOR CLEANOUT PER DETAIL 4/M2.
26. INSTALL DIFFUSER PER DETAIL 5/M2.

GENERAL NOTES:

A. ALL SEWER AND VENT PIPING SHALL BE SCHEDULE 40 PVC, SOLID CORE, WITH DWV FITTINGS AND SOLVENT WELDED JOINTS. BELOW GRADE SEWER PIPING SHALL BE IMBEDDED IN 4" OF SAND SURROUNDING THE PIPING.

B. BELOW GRADE WATER PIPING SHALL BE CROSS-LINKED POLYETHEYLENE TUBING (PEX) WITH NO JOINTS BELOW THE BUILDING. PIPING SHALL BE IMBEDDED IN 4" OF SAND SURROUNDING THE PIPING.

C. ABOVE GRADE WATER PIPING SHALL BE TYPE "L" HARD DRAWN COPPER WITH SOLDER JOINTS. SOLDER SHALL BE SILVERBRITE 100.

D. COMPRESSED AIR PIPING SHALL BE SCHEDULE 40 STEEL PIPE WITH SCREW FITTINGS.

E. EXTERIOR DUCTWORK SHALL BE INSULATED WITH 2" THICK, 3/4 lb DENSITY FIBERGLASS BOARD INSULATION WITH FSK VAPOR BARRIER WITH 3" FSK TAPE JOINTS AND COVERED WITH 0.032" THICK ALUMINUM JACKET. ALL LAPS SHALL BE TURNED TO AVOID WATER ENTRAPMENT AND SEALED WITH ALUMINUM COLORED SILICONE.

F. INTERIOR DUCTWORK SHALL BE INSULATED WITH 2" THICK, 3/4 lb DENSITY FIBERGLASS WRAP WITH REINFORCED ALUMINUM JACKET. ALL JOINTS SHALL BE SEALED WITH REINFORCED ALUMINUM TAPE.

G. INSTALL TURNING VANES IN ALL RECTANGULAR DUCT ELBOWS.

Cottonwood Engineering Corp.
920 HAWAII
ALAMOGORDO, NEW MEXICO 88310
PHONE: 505-434-9195
E-MAIL: COTTNWOOD@WLCOKINGGLASS.COM

NRTF Target Preparation Building - Main Site

White Sands Missile Range, NM

Drawings prepared by Cottonwood Engineering, Alamogordo, New Mexico

PROJECT NO:
DATE: 4/24/01
DRAWN BY: LAM
REVISIONS:

SHEET M1 OF 2

FOR INFORMATION ONLY AMENDMENT 3